Overview of Control and Grid Synchronization for Distributed Power Generation Systems

Frede Blaabjerg, *Fellow, IEEE*, Remus Teodorescu, *Senior Member, IEEE*, Marco Liserre, *Member, IEEE*, and Adrian V. Timbus, *Student Member, IEEE*

***Abstract*—Renewable energy sources like wind, sun, and hydro are seen as a reliable alternative to the traditional energy sources such as oil, natural gas, or coal. Distributed power generation systems (DPGSs) based on renewable energy sources experience a large development worldwide, with Germany, Denmark, Japan, and USA as leaders in the development in this field. Due to the increasing number of DPGSs connected to the utility network, new and stricter standards in respect to power quality, safe running, and islanding protection are issued. As a consequence, the control of distributed generation systems should be improved to meet the requirements for grid interconnection. This paper gives an overview of the structures for the DPGS based on fuel cell, photovoltaic, and wind turbines. In addition, control structures of the grid-side converter are presented, and the possibility of compensation for low-order harmonics is also discussed. Moreover, control strategies when running on grid faults are treated. This paper ends up with an overview of synchronization methods and a discussion about their importance in the control.**

***Index Terms*—Control strategies, distributed power generation, grid converter control, grid disturbances, grid synchronization.**

I. Introduction

NOWADAYS, fossil fuel is the main energy supplier of the worldwide economy, but the recognition of it as being a major cause of environmental problems makes the mankind to look for alternative resources in power generation. Moreover, the day-by-day increasing demand for energy can create problems for the power distributors, like grid instability and even outages. The necessity of producing more energy combined with the interest in clean technologies yields in an increased development of power distribution systems using renewable energy [1].

Among the renewable energy sources, hydropower and wind energy have the largest utilization nowadays. In countries with hydropower potential, small hydro turbines are used at the distribution level to sustain the utility network in dispersed or remote locations. The wind power potential in many countries around the world has led to a large interest and fast development of wind turbine (WT) technology in the last decade [2]. A total amount of nearly 35-GW wind power has been installed in Europe by the end of 2004, as shown in Fig. 1(a).

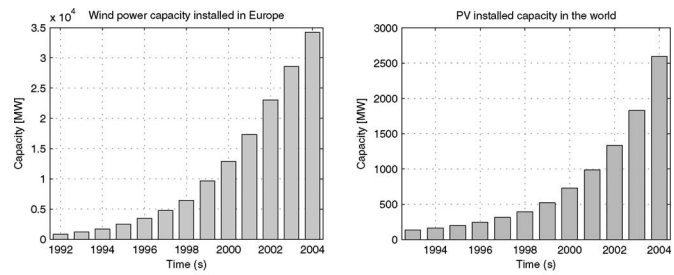

(a) (b)

Fig. 1. Installed capacity at the end of 2004. (a) Wind energy in Europe [2]. (b) PV power in the world [3].

Another renewable energy technology that gains acceptance as a way of maintaining and improving living standards without harming the environment is the photovoltaic (PV) technology. As shown in Fig. 1(b), the number of PV installations has an exponential growth, mainly due to the governments and utility companies that support programs that focus on grid-connected PV systems [3], [4].

Besides their low efficiency, the controllability of the distributed power generation systems (DPGSs) based on both wind and sun are their main drawback [5]. As a consequence, their connection to the utility network can lead to grid instability or even failure, if these systems are not properly controlled. Moreover, the standards for interconnecting these systems to the utility network are stressing more and more the capability of the DPGS to run over short grid disturbances. In this case, both synchronization algorithm and current controller play a major role. Therefore, the control strategies applied to distributed systems become of high interest.

This paper gives an overview of the main DPGS structures, PV and fuel cell (FC) systems being first discussed. A classification of WT systems with regard to the use of power electronics follows. This is continued by a discussion of control structures for grid-side converter and the possibilities of implementation in different reference frames. Further on, the main characteristics of control strategies under grid fault conditions are discussed. The overview of grid synchronization methods and their influence in control conclude this paper.

Manuscript received January 31, 2006. Abstract published on the Internet July 14, 2006. This work was supported in part by Risø National Laboratory, in part by Eltra, and in part by the Danish Research Councils under Contract 2058-03-0003.

F. Blaabjerg, R. Teodorescu, and A. V. Timbus are with the Institute of Energy Technology, Aalborg University, 9220 Aalborg, Denmark (e-mail: fbl@iet.aau.dk; ret@iet.aau.dk; avt@iet.aau.dk).

M. Liserre is with the Department of Electrotechnical and Electronic Engineering, Polytechnic of Bari, 70125 Bari, Italy (e-mail: liserre@poliba.it).

Digital Object Identifier 10.1109/TIE.2006.881997

0278-0046/$20.00 © 2006 IEEE

Authorized licensed use limited to: Pontificia Universidad Catolica de Chile. Downloaded on March 17,2026 at 18:13:37 UTC from IEEE Xplore. Restrictions apply.

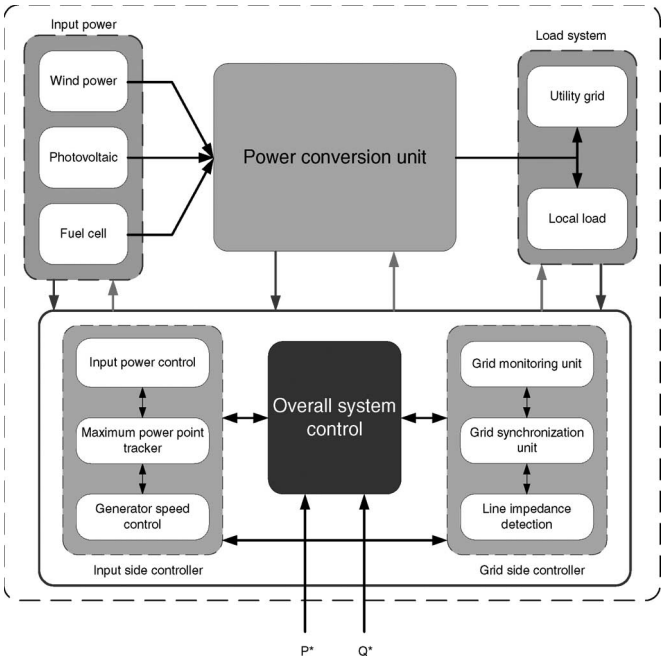

Fig. 2. General structure for distributed power system having different input power sources.

II. DPGS Structure

A general structure for distributed systems is illustrated in Fig. 2. The input power is transformed into electricity by means of a power conversion unit whose configuration is closely related to the input power nature. The electricity produced can be delivered to the local loads or to the utility network, depending where the generation system is connected.

One important part of the distributed system is its control. The control tasks can be divided into two major parts.

1) Input-side controller, with the main property to extract the maximum power from the input source. Naturally, protection of the input-side converter is also considered in this controller.
2) Grid-side controller, which can have the following tasks:
   - control of active power generated to the grid;
   - control of reactive power transfer between the DPGS and the grid;
   - control of dc-link voltage;
   - ensure high quality of the injected power;
   - grid synchronization.

The items listed above for the grid-side converter are the basic features this converter should have. Additionally, ancillary services like local voltage and frequency regulation, voltage harmonic compensation, or active filtering might be requested by the grid operator.

As previously pointed out, the power conversion unit has different hardware structures, which are closely related to the input power nature. The following section presents the revision of the technologies mostly used today in FC and PV systems as well as WT systems.

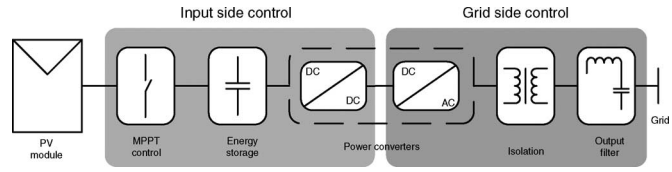

Fig. 3. Hardware structure for a PV system using a dc–dc stage to boost the input voltage.

III. Hardware Topologies for DPGS

A detailed description of the hardware structure for many types of DPGSs is given in [5]. Noticeable is that the PV and FC systems have a similar hardware structure, whereas different hardware topologies can be found for WT systems, depending on the type of the generator used. A brief introduction into the structure of these systems is given below.

A. PV and FC Systems

As aforementioned, the hardware structures of PV and FC systems are quite similar. Although both FC and PV systems have a low-voltage input provided by the FC and PV panels, more such units can be connected together to obtain the required voltage and power. Usually, power conditioning systems, including inverters and dc–dc converters, are often required to supply normal customer load demand or send electricity into the grid, as shown in Fig. 3. The voltage boosting can be done in the dc or ac stage of the system [5]–[11]. For smoothing the output current, an LCL filter is normally used between these systems and the utility network. In addition, isolation between the input and output powers is required in many countries where such systems are installed. Again, there are two ways to achieve isolation, namely: 1) using the dc–dc converter and 2) using an isolation transformer after the dc–ac stage.

B. WT Systems

In this section, a classification of WT systems in those using and those not using power electronics as interface to the utility network is given. Hardware structures in each case will be illustrated to distinguish the systems.

1) WT Systems Without Power Electronics: Most of these topologies are based on squirrel-cage induction generator (SCIG), which is directly connected to the grid. A soft starter is usually used to reduce the inrush currents during start up [5], [12], [13]. Moreover, a capacitor bank is necessary to compensate for the reactive power necessary to the machine, as shown in Fig. 4(a).

2) WT Systems With Power Electronics: By adding power electronics units into the WT systems, the complexity of the system is increased. In addition, the solution becomes more expensive. In any case, better control of the input power and grid interaction is obtained. For example, maximum power for a large interval of wind speeds can be extracted while control of both active and reactive powers into the grid is achieved by means of power electronics.

Authorized licensed use limited to: Pontificia Universidad Catolica de Chile. Downloaded on March 17,2026 at 18:13:37 UTC from IEEE Xplore. Restrictions apply.

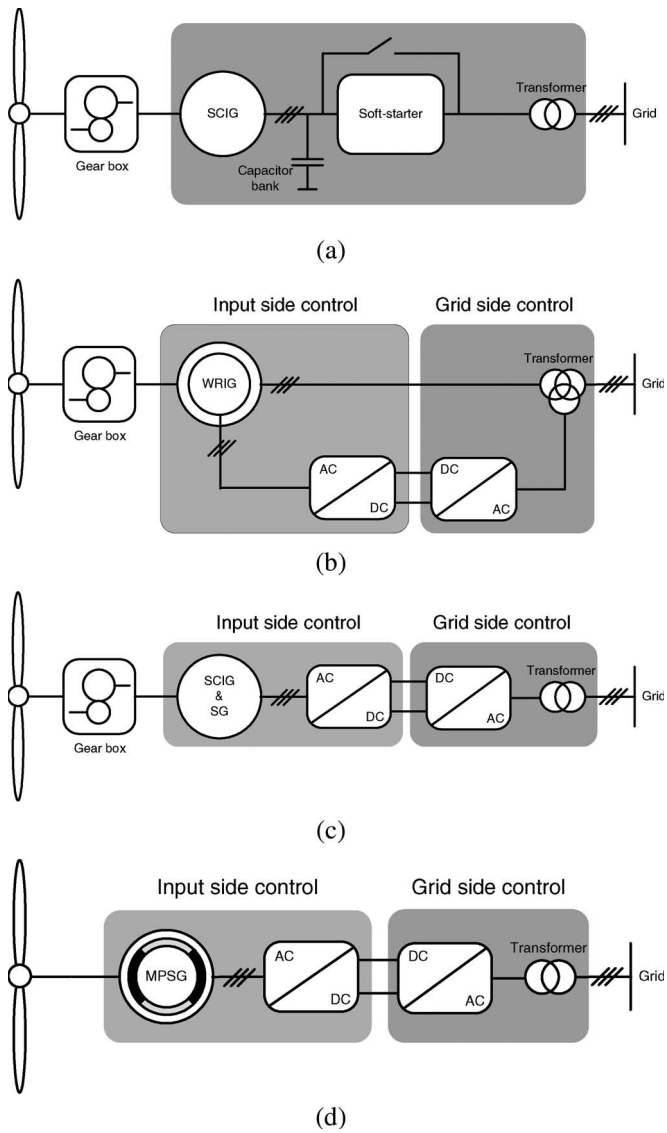

Fig. 4. WT systems using power electronics. (a) Minimum electronics unit. (b) Partial power converter. (c) Full-scale power converter structure with gearbox. (d) Full-scale power converter structure without gearbox and using multipole synchronous generator.

The usage of power electronics into WT systems can be further divided into two categories, namely: 1) systems using partial-scale power electronics units and 2) systems using full-scale power electronics units. A particular structure is to use an induction generator with a wounded rotor. An extra resistance controlled by power electronics is added in the rotor, which gives a variable speed range of 2% to 4%. The power converter for the rotor resistance control is for low voltage but high currents. In any case, this solution also needs a soft starter and a reactive power compensator [5].

Additionally, another solution is to use a medium-scale power converter with a wounded rotor induction generator, as shown in Fig. 4(b). In this case, a power converter connected to the rotor through slip rings controls the rotor currents. If the generator is running supersynchronously, the electrical power is delivered through both the rotor and stator. If the generator is running subsynchronously, the electrical power is only delivered into the rotor from the grid. A speed variation of 60% around synchronous speed may be obtained by the use of a power converter of 30% of nominal power [5].

By implementing a full-scale power converter between the generator and the utility grid, additional technical performances of the WT system can be achieved, with the payback in losses in the power conversion stage. Normally, as shown in Fig. 4(c), SCIG is used in this configuration, but an advantage to eliminate the gearbox can be obtained by using multipole wound-rotor synchronous generator or permanent-magnet synchronous generator, as depicted in Fig. 4(d).

It could be noticed that for interacting with the power system, all the structures presented above use two-level pulsewidth-modulation (PWM) voltage-source inverters (VSI) because this is the state-of-the-art technology used today by all manufacturers of wind systems. The possibility of high switching frequencies combined with a proper control makes these converters suitable for grid interface in the case of distributed generation, which has a large contribution to the improvement of generated power quality.

Yet, three-level neutral-point-clamped VSI is an option for high-power WT systems (5 MW) to avoid high-voltage power devices. Attempts of using multilevel [14] or matrix converters [15], [16] have been made, but the use of these technologies is not validated yet in the field of distributed generation.

Therefore, the next section presents discussion on the control structures and strategies applied to two-level VSI PWM-driven converters, focusing on the grid-side converter control. Control structures implemented in different reference frames are presented, and the possibility of compensating for low-order harmonics is discussed. Moreover, control strategies when grid faults occur are considered.

IV. Control Structures for Grid-Connected DPGS

The control strategy applied to the grid-side converter consists mainly of two cascaded loops. Usually, there is a fast internal current loop, which regulates the grid current, and an external voltage loop, which controls the dc-link voltage [17]–[22]. The current loop is responsible for power quality issues and current protection; thus, harmonic compensation and dynamics are the important properties of the current controller. The dc-link voltage controller is designed for balancing the power flow in the system. Usually, the design of this controller aims for system stability having slow dynamics.

In some works, the control of grid-side controller is based on a dc-link voltage loop cascaded with an inner power loop instead of a current loop. In this way, the current injected into the utility network is indirectly controlled [23].

Moreover, control strategies employing an outer power loop and an inner current loop are also reported [24].

In the following, a division of the control strategies in respect to the reference frame they are implemented in is given, and the main properties of each structure are highlighted.

A. Synchronous Reference Frame Control

Synchronous reference frame control, also called dq control, uses a reference frame transformation module, e.g., $abc \rightarrow dq$,

Authorized licensed use limited to: Pontificia Universidad Catolica de Chile. Downloaded on March 17,2026 at 18:13:37 UTC from IEEE Xplore. Restrictions apply.

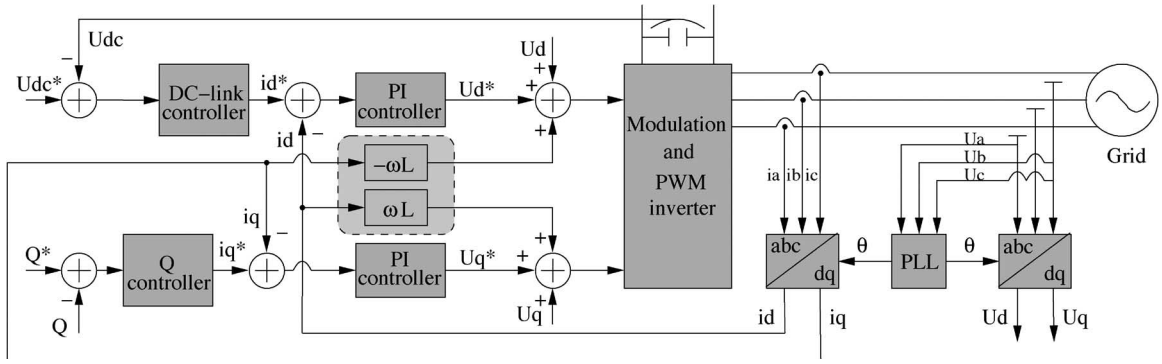

Fig. 5. General structure for synchronous rotating frame control structure.

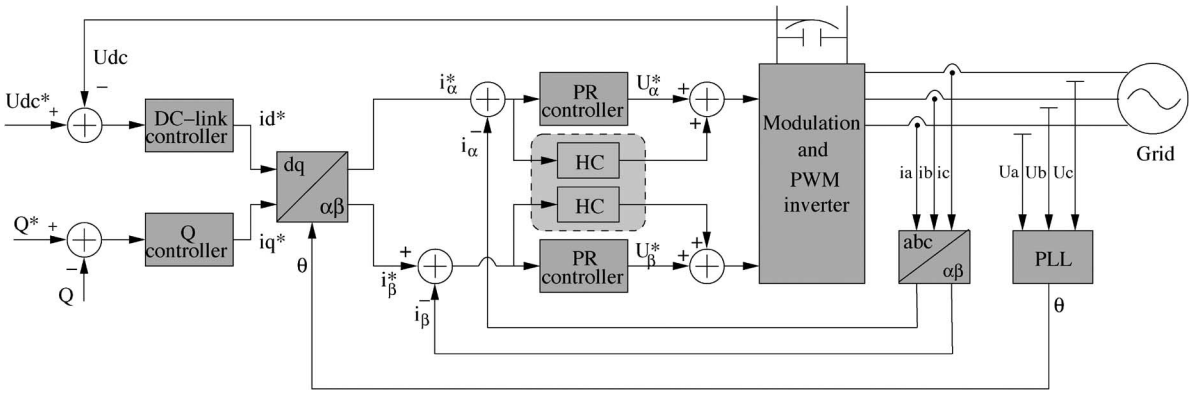

Fig. 6. General structure for stationary reference frame control strategy.

to transform the grid current and voltage waveforms into a reference frame that rotates synchronously with the grid voltage. By means of this, the control variables become dc values; thus, filtering and controlling can be easier achieved [25].

A schematic of the dq control is represented in Fig. 5. In this structure, the dc-link voltage is controlled in accordance to the necessary output power. Its output is the reference for the active current controller, whereas the reference for the reactive current is usually set to zero, if the reactive power control is not allowed. In the case that the reactive power has to be controlled, a reactive power reference must be imposed to the system.

The dq control structure is normally associated with proportional–integral (PI) controllers since they have a satisfactory behavior when regulating dc variables. The matrix transfer function of the controller in dq coordinates can be written as

$$G_{\mathrm{PI}}^{(dq)}(s) = \begin{bmatrix} K_p + \frac{K_i}{s} & 0 \\ 0 & K_p + \frac{K_i}{s} \end{bmatrix} \tag{1}$$

where K_p is the proportional gain and K_i is the integral gain of the controller.

Since the controlled current has to be in phase with the grid voltage, the phase angle used by the $abc \rightarrow dq$ transformation module has to be extracted from the grid voltages. As a solution, filtering of the grid voltages and using arctangent function to extract the phase angle can be a possibility [26]–[28]. In addition, the phase-locked loop (PLL) technique [29]–[33] became a state of the art in extracting the phase angle of the grid voltages in the case of distributed generation systems.

For improving the performance of PI controller in such a structure as depicted in Fig. 5, cross-coupling terms and voltage feedforward are usually used [17], [19], [25], [34], [35]. In any case, with all these improvements, the compensation capability of the low-order harmonics in the case of PI controllers is very poor, standing as a major drawback when using it in grid-connected systems.

B. Stationary Reference Frame Control

Another possible way to structure the control loops is to use the implementation in stationary reference frame, as shown in Fig. 6. In this case, the grid currents are transformed into stationary reference frame using the $abc \rightarrow \alpha\beta$ module. Since the control variables are sinusoidal in this situation and due to the known drawback of PI controller in failing to remove the steady-state error when controlling sinusoidal waveforms, employment of other controller types is necessary. Proportional resonant (PR) controller [36]–[39] gained a large popularity in the last decade in current regulation of grid-tied systems.

In the PR case, the controller matrix in the stationary reference frame is given by

$$G_{\mathrm{PR}}^{(\alpha\beta)}(s) = \begin{bmatrix} K_p + \frac{K_i s}{s^2+\omega^2} & 0 \\ 0 & K_p + \frac{K_i s}{s^2+\omega^2} \end{bmatrix} \tag{2}$$

where ω is the resonance frequency of the controller, K_p is the proportional gain, and K_i is the integral gain of the controller.

Authorized licensed use limited to: Pontificia Universidad Catolica de Chile. Downloaded on March 17,2026 at 18:13:37 UTC from IEEE Xplore. Restrictions apply.

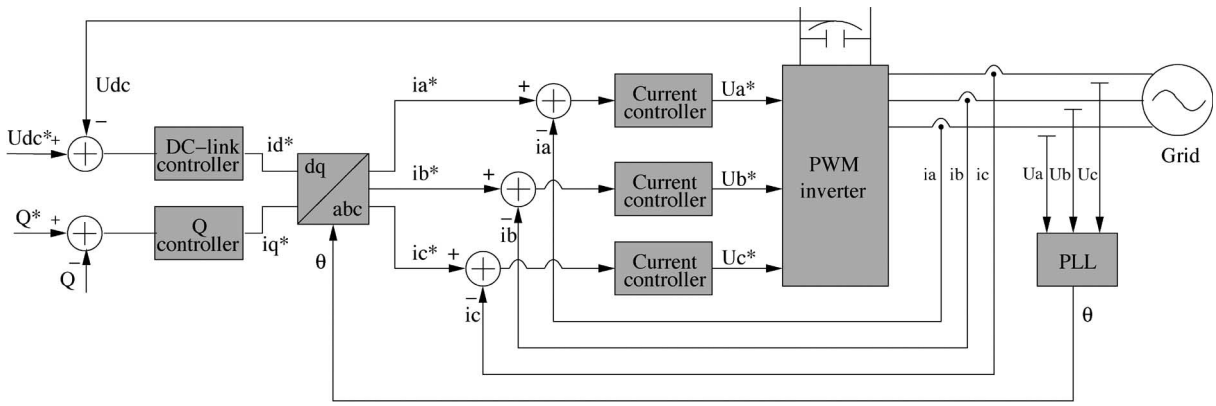

Fig. 7. General structure for natural reference frame control strategy.

Characteristic to this controller is the fact that it achieves a very high gain around the resonance frequency, thus being capable to eliminate the steady-state error between the controlled signal and its reference [38]. The width of the frequency band around the resonance point depends on the integral time constant K_i. A low K_i leads to a very narrow band, whereas a high K_i leads to a wider band.

Moreover, high dynamic characteristics of PR controller have been reported in different works [39], [40].

C. Natural Frame Control

The idea of abc control is to have an individual controller for each grid current; however, the different ways to connect the three-phase systems, i.e., delta, star with or without isolated neutral, etc., is an issue to be considered when designing the controller. In the situation of isolated neutral systems, the phases interact to one another; hence, only two controllers are necessary since the third current is given by the Kirchhoff current law. In any case, the possibility of having three independent controller is possible by having extra considerations in the controller design as usually is the case for hysteresis and dead-beat control.

Normally, abc control is a structure where nonlinear controllers like hysteresis or dead beat are preferred due to their high dynamics. It is well known that the performance of these controllers is proportional to the sampling frequency; hence, the rapid development of digital systems such as digital signal processors or field-programmable gate array is an advantage for such an implementation.

A possible implementation of abc control is depicted in Fig. 7, where the output of dc-link voltage controller sets the active current reference. Using the phase angle of the grid voltages provided by a PLL system, the three current references are created. Each of them is compared with the corresponding measured current, and the error goes into the controller. If hysteresis or dead-beat controllers are employed in the current loop, the modulator is not anymore necessary. The output of these controllers is the switching states for the switches in the power converter. In the case that three PI or PR controllers are used, the modulator is necessary to create the duty cycles for the PWM pattern.

1) PI Controller: PI controller is widely used in conjunction with dq control, but its implementation in abc frame is also possible as described in [35]. The transfer function of the controller in this case becomes (3), shown at the bottom of the page, and the complexity of the controller matrix in this case, due to the significant off-diagonal terms representing the cross coupling between the phases, is noticeable.

2) PR Controller: The implementation of PR controller in abc is straightforward since the controller is already in stationary frame and implementation of three controllers is possible as illustrated in (4), shown at the bottom of the page. Again, in this case, the influence of the isolated neutral in the control has to be accounted; hence, the third controller is not necessary in (4). However, it is worth noticing that the complexity

$$G_{\mathrm{PI}}^{(abc)}(s) = \frac{2}{3}\cdot\begin{bmatrix} K_p + \frac{K_i s}{s^2+\omega_0^2} & -\frac{K_p}{2} - \frac{K_i s+\sqrt{3}K_i\omega_0}{2\cdot\left(s^2+\omega_0^2\right)} & -\frac{K_p}{2} - \frac{K_i s-\sqrt{3}K_i\omega_0}{2\cdot\left(s^2+\omega_0^2\right)} \\ -\frac{K_p}{2} - \frac{K_i s-\sqrt{3}K_i\omega_0}{2\cdot\left(s^2+\omega_0^2\right)} & K_p + \frac{K_i s}{s^2+\omega_0^2} & -\frac{K_p}{2} - \frac{K_i s+\sqrt{3}K_i\omega_0}{2\cdot\left(s^2+\omega_0^2\right)} \\ -\frac{K_p}{2} - \frac{K_i s+\sqrt{3}K_i\omega_0}{2\cdot\left(s^2+\omega_0^2\right)} & -\frac{K_p}{2} - \frac{K_i s-\sqrt{3}K_i\omega_0}{2\cdot\left(s^2+\omega_0^2\right)} & K_p + \frac{K_i s}{s^2+\omega_0^2} \end{bmatrix} \tag{3}$$

$$G_{\mathrm{PR}}^{(abc)}(s) = \begin{bmatrix} K_p + \frac{K_i s}{s^2+\omega_0^2} & 0 & 0 \\ 0 & K_p + \frac{K_i s}{s^2+\omega_0^2} & 0 \\ 0 & 0 & K_p + \frac{K_i s}{s^2+\omega_0^2} \end{bmatrix} \tag{4}$$

Authorized licensed use limited to: Pontificia Universidad Catolica de Chile. Downloaded on March 17,2026 at 18:13:37 UTC from IEEE Xplore. Restrictions apply.

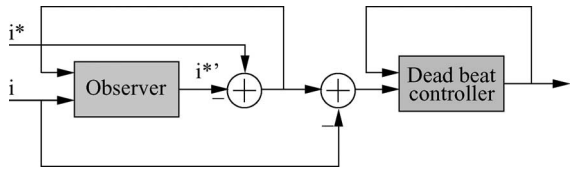

Fig. 8. Structure of the dead-beat controller using an observer to compensate for the delay introduced by the controller.

of the controller in this case is considerably reduced compared to (3).

3) Hysteresis Controller: It is worth noticing that in the case of hysteresis control implementation, an adaptive band of the controller has to be designed to obtain fixed switching frequency. In [41]–[44], different methods and algorithms to obtain fixed switching frequency are presented.

Since the output of the hysteresis controller is the state of the switches, considerations about the isolated neutral are again necessary. In [43], an a' term is introduced in the formula of the hysteresis band (HB) to account for the load (transformer) connection type, i.e.,

$$\mathrm{HB} = \frac{0.25a'U_{\mathrm{dc}}}{f_{\mathrm{sw}}L_T}\left[1 - \frac{L_T^2}{a'^2U_{\mathrm{dc}}}\left(\frac{U_g}{L_T} + \frac{di^*}{dt}\right)^2\right]. \quad (5)$$

In [45], a similar approach is used, but the current error is split into its noninteracting part ζ and the interacting part γ to resolve the equation for the variable HB.

4) Dead-Beat Controller: The dead-beat controller attempts to null the error with one sample delay. The controller in its digital implementation is as follows:

$$G_{\mathrm{DB}}^{(abc)} = \frac{1}{b}\cdot\frac{1 - az^{-1}}{1 - z^{-1}} \quad (6)$$

where a and b are denoted as follows:

$$a = e^{-\frac{R_T}{L_T}Ts}$$
$$b = -\frac{1}{R_T}\left(e^{-\frac{R_T}{L_T}Ts} - 1\right). \quad (7)$$

Since dead-beat controller regulates the current such that it reaches its reference at the end of the next switching period, the controller introduces one sample time delay. To compensate for this delay, an observer can be introduced in the structure of the controller, with the aim to modify the current reference to compensate for the delay [46], as shown in Fig. 8.

The discrete transfer function of the observer is given by

$$F_{\mathrm{DB}}^{(abc)} = \frac{1}{1 - z^{-1}} \quad (8)$$

thus, the new current reference becomes

$$i^{*'} = F_{\mathrm{DB}}^{(abc)}(i^* - i). \quad (9)$$

As a consequence, a very fast controller containing no delay is finally obtained. Moreover, the algorithms of the dead-beat controller and observer are not complicated, which is suitable for microprocessor-based implementation [47].

TABLE I
DISTORTION LIMITS FOR DISTRIBUTED GENERATION SYSTEMS SET BY IEC STANDARD [50]

Odd harmonics	Distortion limit
3rd – 9th	< 4.0 %
11th – 15th	< 2.0 %
17th – 21st	< 1.5 %
23rd – 33rd	< 0.6 %

In addition, in the case of abc control, two modalities of implementing the PLL are possible. The first possibility is to use three single-phase PLL systems [33]; thus, the three phase angles are independently extracted from the grid voltages. In this case, the transformation module $dq \rightarrow abc$ is not anymore necessary, with the active current reference being multiplied with the sine of the phase angles. The second possibility is to use one three-phase PLL [31], [32], [48], [49]. In this case, the current references are created, as shown in Fig. 7. A discussion about the influence of the PLL in the control loop is given in Section VII.

D. Evaluation of Control Structures

The necessity of voltage feedforward and cross-coupling terms is the major drawbacks of the control structure implemented in synchronous reference frame. Moreover, the phase angle of the grid voltage is a must in this implementation. In the case of control structure implemented in stationary reference frame, if PR controllers are used for current regulation, the complexity of the control becomes lower compared to the structure implemented in dq frame. Additionally, the phase angle information is not a necessity, and filtered grid voltages can be used as template for the reference current waveform.

In the case of control structure implemented in natural frame, the complexity of the control can be high if an adaptive band hysteresis controller is used for current regulation. A simpler control scheme can be achieved by implementing a dead-beat controller instead. Again, as in the case of stationary frame control, the phase angle information is not a must. Noticeable for this control structure is the fact that independent control of each phase can be achieved if grid voltages or three single-phase PLLs are used to generate the current reference.

V. POWER QUALITY CONSIDERATIONS

One of the demands present in all standards with regard to grid-tied systems is the quality of the distributed power. According to the standards in this field [13], [50]–[53], the injected current in the grid should not have a total harmonic distortion larger than 5%. A detailed image of the harmonic distortion with regard to each harmonic is given in Table I.

As it was mentioned previously, one of the responsibilities of the current controller is the power quality issue. Therefore, different methods to compensate for the grid harmonics to obtain an improved power quality are addressed in the following.

A. Harmonics Compensation Using PI Controllers

Since PI controllers typically are associated with dq control structure, the possibilities for harmonic compensation are based

Authorized licensed use limited to: Pontificia Universidad Catolica de Chile. Downloaded on March 17,2026 at 18:13:37 UTC from IEEE Xplore. Restrictions apply.

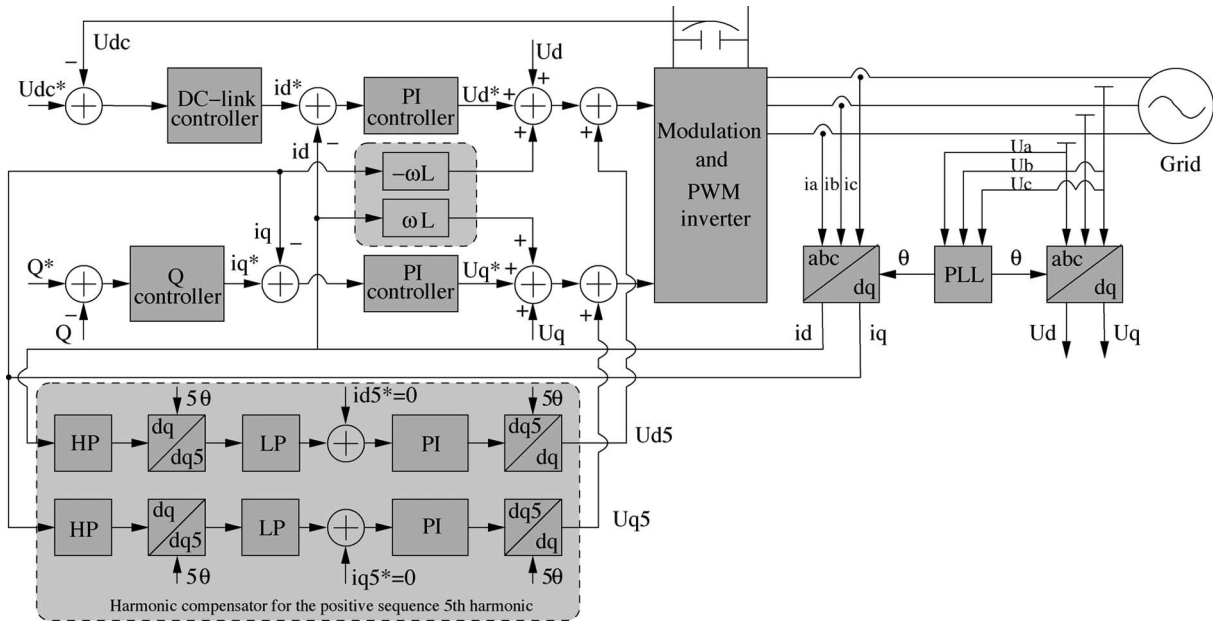

Fig. 9. Method for compensating the positive sequence of the fifth harmonic in dq control structure.

on low-pass and high-pass filters [54]. If the current controller has to be immune to the grid voltage harmonic distortion (mainly fifth and seventh in three-phase systems), harmonic compensator for each harmonic order should be designed. Fig. 9 shows the dq control structure having a harmonic compensator for the positive sequence of the fifth harmonic. In addition, under unbalanced conditions, harmonic compensators for both positive and negative sequences of each harmonic order are necessary. As a consequence, four compensators like the ones depicted in Fig. 9 are necessary to compensate for the fifth and seventh harmonics. The complexity of the control algorithm is noticeable in this case.

B. Harmonics Compensation Using PR Controllers

In the case of PR control implementation, things are different. Harmonic compensation can be achieved by cascading several generalized integrators tuned to resonate at the desired frequency. In this way, selective harmonic compensation at different frequencies is obtained. In [38], the transfer function of a typical harmonic compensator (HC) designed to compensate the third, fifth, and seventh harmonics is given as follows:

$$G_h(s) = \sum_{h=3,5,7} K_{ih} \frac{s}{s^2 + (\omega \cdot h)^2}. \tag{10}$$

In this case, it is easy to extend the capabilities of the scheme by adding harmonic compensation features simply with more resonant controllers in parallel to the main controller, as illustrated in Fig. 10. The main advantage in this situation is given by the fact that the harmonic compensator works on both positive and negative sequences of the selected harmonic; thus, only one HC is necessary for a harmonic order.

An interesting feature of the HC is that it does not affect the dynamics of the PR controller, as it only reacts to the frequencies very close to the resonance frequency. This characteristic

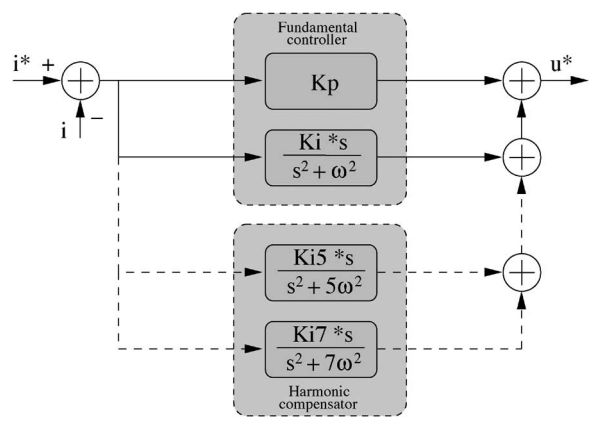

Fig. 10. Structure of the harmonic compensator attached to the resonant controller of the fundamental current.

makes the PR controller a successful solution in applications where high dynamics and harmonics compensation, especially low-order harmonics, are required, as in the case of a DPGS.

C. Harmonics Compensation Using Nonlinear Controllers

Since both hysteresis and dead-beat controller have very fast dynamics, there is no concern about the low-order harmonics when the implemented control structure uses such controllers. In any case, it should be noticed that the current waveform will contain harmonics at switching and sampling frequencies order. Another issue is the necessity of fast sampling capabilities of the hardware used.

D. Evaluation of Harmonic Compensators

The necessity of using two filters, two transformation modules, and one controller to compensate for the positive sequence of only one harmonic makes the harmonic compensator implemented in dq frame to be not a practical solution. On the other

Authorized licensed use limited to: Pontificia Universidad Catolica de Chile. Downloaded on March 17,2026 at 18:13:37 UTC from IEEE Xplore. Restrictions apply.

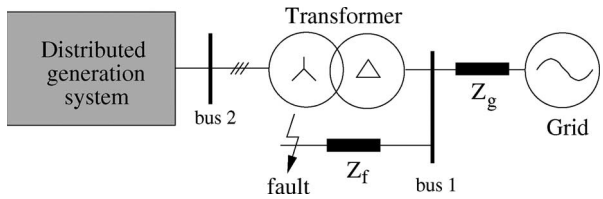

Fig. 11. Distributed generation system connected through a Δ/Y transformer to the utility network.

hand, easier implementation is observed in the situation when the control structure is implemented in stationary reference frame since the structure of the compensator is reduced and it acts on both positive and negative sequences.

VI. Control Strategy Under Grid Faults

Due to the large amount of distributed power generation connected to the utility networks in some countries, instability of the power system may arise. As a consequence, more stringent demands for interconnecting the DPGS to the grid are issued. Among all the requests, more and more stress is put on the ability of a DPGS to ride through short grid disturbances such as voltage and frequency variations.

The grid faults can be classified in two main categories [55].

1) Symmetrical fault is when all three grid voltages register the same amplitude drop but the system remains balanced (no phase shifting is registered). This type of fault is very seldom in the power systems.
2) Unsymmetrical fault is when the phases register an unequal amplitude drop together with phase shifting between them. This type of fault occurs due to one or two phases shorted to ground or to each other.

By considering the DPGS connected to the utility network as shown in Fig. 11, where a distribution transformer is used by the generation system to interface the power system, the propagation of a voltage fault occurring at bus 1 appears different at bus 2. For example, if a severe grid fault like single phase shorted to ground takes place at bus 1, two of the voltages at the DPGS terminals (after the Δ/Y transformer) experience a voltage drop that is dependent on the impedance of the line between the fault and DPGS transformer value. As a consequence, the voltages at bus 2 will register both amplitude and phase unbalance [55].

Since this case is an unsymmetrical fault, the negative sequence appears in the grid voltages. This creates second-harmonic oscillations that propagate in the system, which appear in the dc-link voltage as a ripple [56]. Moreover, the control variables are also affected by this phenomenon. In [57]–[59], it has been shown that the PLL system can be designed to filter out the negative sequence, which produces a clean synchronization signal. If the three-phase PLL system is not designed to be robust to unbalanced, second-harmonic oscillations will appear in the phase angle signal, thus in the current reference.

In addition, the second-harmonic ripple present in the dc-link voltage will also have a negative influence in generation of the current reference. As a consequence, to provide ride-through capabilities for a DPGS, the influence of the unbalance should be minimized when running under faulty conditions.

With regard to the control strategy under faults, four major possibilities are available.

A. Unity Power Factor Control Strategy

One of the control strategies that a DPGS can adopt on grid faults is to maintain unity power factor during the fault. The most efficient set of currents delivering the instantaneous active power P to the grid can be calculated as follows:

$$\mathbf{i} = g\mathbf{v}, \qquad g = \frac{P}{|\mathbf{v}|^2} \tag{11}$$

where g is the instantaneous conductance seen from the inverter output, and $|\mathbf{v}|$ denotes the module of the three-phase voltage vector $\mathbf{v}$. Its value is constant in balanced sinusoidal conditions, but under grid faults, the negative sequence component gives rise to oscillations at twice the fundamental frequency in $|\mathbf{v}|$. Consequently, the injected currents will not keep their sinusoidal waveform, and high-order components will appear in their waveform. Current vector of (11) is instantaneously proportional to the voltage vector and, therefore, does not have any orthogonal component in relation to the grid voltage, hence giving rise to the injection of no reactive power to the grid. Thus, in this situation, both active and reactive instantaneous powers are kept constant during the fault time.

B. Positive Sequence Control Strategy

Another control strategy that can be applied under fault is to follow the positive sequence of the grid voltages. Contrary to the unity power factor control, in this case, a PLL system that can detect the unbalance is necessary in the control structure. Moreover, this system should be robust to unbalanced and should be capable of detecting the positive sequence of the grid voltages. Synchronous reference frame PLL is suited for this purpose. In [57]–[60], the detection of both positive and negative sequences of the utility voltage by modifying the conventional dq PLL has been demonstrated.

Because the extracted phase angle follows the positive sequence of the grid voltages, the reference currents can easily be obtained for all control structures, i.e., dq control, stationary reference frame $(\alpha\beta)$ control, and abc control, since there is no difference between the synchronization angle during the fault and the one during normal operating conditions. The only problem in this situation is the ripple of the dc-link voltage, which has an influence on the active current reference. Using a digital filter such as the delay signal cancellation [17], this can be filtered out without introducing any delay in the system. In any case, the dc-link capacitor should be rated such as it overcomes the second-harmonic ripple present during a fault; otherwise, device failure can occur.

In the case of this control strategy, the grid currents will remain sinusoidal and balanced during the fault, only registering an increase in amplitude due to the amplitude drop of the grid voltages. In any case, both active and reactive power will register double-frequency oscillations over the whole fault period.

Authorized licensed use limited to: Pontificia Universidad Catolica de Chile. Downloaded on March 17,2026 at 18:13:37 UTC from IEEE Xplore. Restrictions apply.

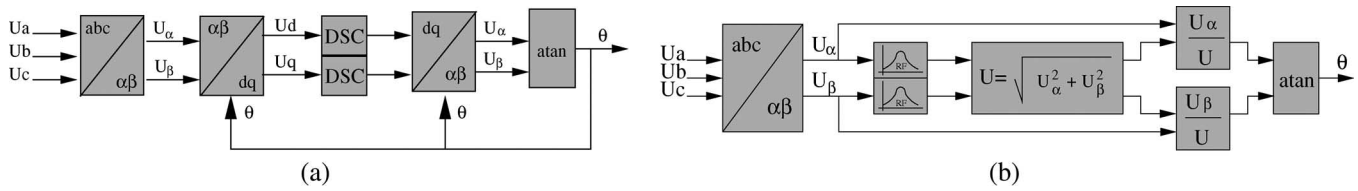

Fig. 12. Synchronization method using (a) filtering on the dq synchronous rotating reference frame and (b) filtering on $\alpha\beta$ stationary frame.

C. Constant Active Power Control Strategy

Another control strategy that might be adopted under faulty grid conditions is to keep the active power constant. As previously mentioned, in the case of unbalance, the grid voltages will comprise both positive and negative sequences. Similarly, the grid current will became unbalanced; thus, both the active and reactive powers will experience double-harmonic oscillations. In [61]–[63], it has been demonstrated that when injecting an amount of negative sequence in the current reference (12), the compensation for the double harmonic can be obtained; thus, the active power can be kept constant during the fault, i.e.,

$$I_n = -\frac{U_n}{U_p} I_p \tag{12}$$

where p and n denote the positive and negative sequence components of both current and voltage. In case this control strategy is applied to a control structure that uses PI controllers for current regulation, additional controllers for the negative sequence current are necessary [17], [61].

In the case of a control structure based on PR controller, the negative component of the current can be introduced in the current reference since this controller can regulate both $+\omega$ and $-\omega$, presenting a clear advantage from the implementation point of view. It is worth noticing that in the case of constant power control strategy, the grid currents are not balanced during the fault. Moreover, the reactive power experiences large oscillations.

D. Constant Reactive Power Control Strategy

Like in the constant active power control case, similar expression can be derived for the reactive power to cancel the double-frequency oscillations. Additionally, a current vector orthogonal to the grid voltage vector can be found, and this can give access to independent control of reactive power if, for example, the DPGS should exchange some amount of reactive power to the grid. In this case, the reference for the reactive power should be changed from zero to the desired value when the grid fault is detected.

As a consequence, the upcoming grid codes can be fulfilled by using one of the control strategies presented, depending on what the power system operator imposes when the DPGS is connected to the utility network.

VII. Overview of Grid Synchronization Methods

The injected current into the utility network has to be synchronized with the grid voltage as the standards in the field request [50]–[53]. Therefore, grid synchronization algorithms play an important role for DPGSs. The synchronization algorithm mainly outputs the phase of the grid voltage vector, which is used to synchronize the control variables, e.g., grid currents with the grid voltages using different transformation modules like $abc \rightarrow dq$.

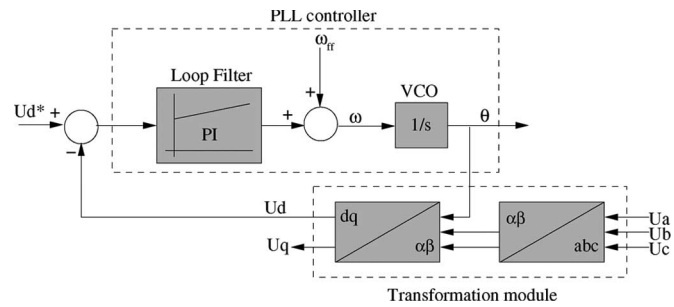

Fig. 13. PLL structures. General structure of the three-phase dq PLL method.

Different methods to extract the phase angle have been developed and presented in many works up to now. In [32], a comparison of the main techniques used for detecting the phase angle of the grid voltages on different grid conditions is carried out. Advantages and disadvantages as well as an evaluation of performance are presented.

In this paper, a brief description of the main methods is given, and a discussion about detection of grid unbalance is given.

A. Zero-Crossing Method

Among all the techniques, the zero-crossing method has the simplest implementation; however, poor performances are also reported when using it, mainly if grid voltages register variations such as harmonics or notches.

B. Filtering of Grid Voltages

Filtering of the grid voltages in different reference frames such as dq [32] or $\alpha\beta$ [26]–[28] is another possibility, as Fig. 12(a) and (b) illustrates. Improved performance over the zero-crossing method is reported, but still, the filtering technique encounters difficulty to extract the phase angle when grid variations or faults occur in the utility network [32]. The method requires the use of the arctangent function to obtain the phase angle of the utility voltage. It is well known that using filtering, a delay is introduced in the processed signal. In the case when it is used for extracting the grid voltage angle, this is unacceptable. Thus, a proper filter design is a necessity.

Authorized licensed use limited to: Pontificia Universidad Catolica de Chile. Downloaded on March 17,2026 at 18:13:37 UTC from IEEE Xplore. Restrictions apply.

In the case when the current controller is implemented in the stationary reference frame, as shown in Fig. 6, the knowledge of the grid voltage angle θ is not needed; hence, it is not necessary to calculate the arctangent function. In fact, the filtered $\alpha\beta$ components can be directly used as a template for the reference current signal to be synchronized [64].

C. PLL Technique

Nowadays, the PLL technique is the state-of-the-art method to extract the phase angle of the grid voltages [31], [33], [48], [49]. The PLL is implemented in dq synchronous reference frame, and its schematic is illustrated in Fig. 13. As it can be noticed, this structure needs the coordinate transformation form $abc \rightarrow dq$, and the lock is realized by setting the reference U_d^* to zero. A regulator, usually PI, is used to control this variable, and the output of this regulator is the grid frequency. After the integration of the grid frequency, the utility voltage angle is obtained, which is fed back into the $\alpha\beta \rightarrow dq$ transformation module to transform into the synchronous rotating reference frame.

This algorithm has a better rejection of grid harmonics, notches, and any other kind of disturbances, but additional improvements have to be done to overcome grid unbalance [57]–[59], [65], [66]. In the case of unsymmetrical voltage faults, the second harmonics produced by the negative sequence will propagate through the PLL system and will be reflected in the extracted phase angle. To overcome this, different filtering techniques are necessary such that the negative sequence is filtered out. As a consequence, during unbalanced conditions, the three-phase dq PLL structure can estimate the phase angle of the positive sequence of the grid voltages.

VIII. Conclusion

This paper has discussed the control of a DPGS. Hardware structures for the DPGS, control structures for the grid-side converter, and control strategies under faults were primarily addressed. Different implementation structures like dq and stationary and natural frame control structures were presented, and their major characteristics were pointed out. A discussion about different controllers and their ability to compensate for low-order harmonics presented in the utility network was given. In addition, four different control strategies that a DPGS can use during an unbalanced grid fault were discussed.

Finally, an overview of grid synchronization algorithms was given. Their influence and role in the control of a DPGS on normal and faulty grid condition were discussed.

References

[1] R. Lawrence and S. Middlekauff, "The new guy on the block," *IEEE Ind. Appl. Mag.*, vol. 11, no. 1, pp. 54–59, Jan./Feb. 2005.

[2] EWEA, Oct. 2005, Online Documentation. [Online]. Available: http://www.iea-pvps.org

[3] IEA-PVPS, *Cumulative Installed PV Power*, Oct. 2005. [Online]. Available: http://www.iea-pvps.org

[4] M. Shahidehpour and F. Schwartz, "Don't let the sun go down on PV," *IEEE Power Energy Mag.*, vol. 2, no. 3, pp. 40–48, May/Jun. 2004.

[5] F. Blaabjerg, Z. Chen, and S. Kjaer, "Power electronics as efficient interface in dispersed power generation systems," *IEEE Trans. Power Electron.*, vol. 19, no. 5, pp. 1184–1194, Sep. 2004.

[6] R. W. Erickson and D. Maksimovic, *Fundamentals of Power Electronics*, 2nd ed. Norwell, MA: Kluwer, 2001.

[7] M. Todorovic, L. Palma, and P. Enjeti, "Design of a wide input range DC–DC converter with a robust power control scheme suitable for fuel cell power conversion," in *Proc. IEEE APEC*, 2004, vol. 1, pp. 374–379.

[8] G. K. Andersen, C. Klumpner, S. B. Kjaer, and F. Blaabjerg, "A new green power inverter for fuel cells," in *Proc. IEEE PESC*, 2002, vol. 2, pp. 727–733.

[9] M. Tanrioven and M. Alam, "Modeling, control and power quality evaluation of a PEM fuel cell based power supply system for residential use," in *Proc. IEEE-IAS Annu. Meeting*, 2004, vol. 4, pp. 2808–2814.

[10] R. Caceres and I. Barbi, "A boost DC–AC converter: Analysis, design, and experimentation," *IEEE Trans. Power Electron.*, vol. 14, no. 1, pp. 134–141, Jan. 1999.

[11] C. Cecati, A. Dell'Aquila, and M. Liserre, "A novel three-phase singlestage distributed power inverter," *IEEE Trans. Power Electron.*, vol. 19, no. 5, pp. 1226–1233, Sep. 2004.

[12] S. Heier, *Grid Integration of Wind Energy Conversion Systems*. Hoboken, NJ: Wiley, 1998.

[13] T. Ackermann, *Wind Power in Power Systems*. Hoboken, NJ: Wiley, 2005.

[14] L. Helle and S. Munk-Nielsen, "Comparison of converter efficiency in large variable speed wind turbines," in *Proc. IEEE APEC*, 2001, vol. 1, pp. 628–634.

[15] A. V. Rebsdorf and L. Helle, "Variable wind turbine having a matrix converter," U.S. Patent 6,856,038, Feb. 15, 2003.

[16] S. Barakati, M. Kazerani, and X. Chen, "A new wind turbine generation system based on matrix converter," in *Proc. IEEE Power Eng. Soc. Gen. Meeting*, 2005, pp. 218–224.

[17] G. Saccomando and J. Svensson, "Transient operation of grid-connected voltage source converter under unbalanced voltage conditions," in *Proc. IAS*, Chicago, IL, 2001, vol. 4, pp. 2419–2424.

[18] I. Agirman and V. Blasko, "A novel control method of a VSC without ac line voltage sensors," *IEEE Trans. Ind. Appl.*, vol. 39, no. 2, pp. 519–524, Mar./Apr. 2003.

[19] R. Teodorescu and F. Blaabjerg, "Flexible control of small wind turbines with grid failure detection operating in stand-alone or grid-connected mode," *IEEE Trans. Power Electron.*, vol. 19, no. 5, pp. 1323–1332, Sep. 2004.

[20] R. Teodorescu, F. Blaabjerg, U. Borup, and M. Liserre, "A new control structure for grid-connected LCL PV inverters with zero steady-state error and selective harmonic compensation," in *Proc. IEEE APEC*, 2004, vol. 1, pp. 580–586.

[21] S.-H. Song, S.-I. Kang, and N.-K. Hahm, "Implementation and control of grid connected ac–dc–ac power converter for variable speed wind energy conversion system," in *Proc. IEEE APEC*, 2003, vol. 1, pp. 154–158.

[22] H. Zhu, B. Arnet, L. Haines, E. Shaffer, and J.-S. Lai, "Grid synchronization control without ac voltage sensors," in *Proc. IEEE APEC*, 2003, vol. 1, pp. 172–178.

[23] C. Ramos, A. Martins, and A. Carvalho, "Current control in the grid connection of the double-output induction generator linked to a variable speed wind turbine," in *Proc. IEEE IECON*, 2002, vol. 2, pp. 979–984.

[24] D. Candusso, L. Valero, and A. Walter, "Modelling, control and simulation of a fuel cell based power supply system with energy management," in *Proc. IEEE IECON*, 2002, vol. 2, pp. 1294–1299.

[25] M. Kazmierkowski, R. Krishnan, and F. Blaabjerg, *Control in Power Electronics—Selected Problems*. New York: Academic, 2002.

[26] J. Svensson, "Synchronisation methods for grid-connected voltage source converters," *Proc. Inst. Electr. Eng.—Gener. Transm. Distrib.*, vol. 148, no. 3, pp. 229–235, May 2001.

[27] H. Kim, S.-J. Lee, and S.-K. Sul, "Reference wave generator in dynamic voltage restorers by use of PQR power theory," in *Proc. IEEE APEC*, 2004, vol. 3, pp. 1452–1457.

[28] S.-J. Lee, H. Kim, S.-K. Sul, and F. Blaabjerg, "A novel control algorithm for static series compensators by use of PQR instantaneous power theory," *IEEE Trans. Power Electron.*, vol. 19, no. 3, pp. 814–827, May 2004.

[29] F. M. Gardner, *Phase Lock Techniques*. New York: Wiley, 1979.

[30] G. C. Hsieh and J. C. Hung, "Phase-locked loop techniques—A survey," *IEEE Trans. Ind. Electron.*, vol. 43, no. 6, pp. 609–615, Dec. 1996.

[31] S.-K. Chung, "A phase tracking system for three phase utility interface inverters," *IEEE Trans. Power Electron.*, vol. 15, no. 3, pp. 431–438, May 2000.

Authorized licensed use limited to: Pontificia Universidad Catolica de Chile. Downloaded on March 17,2026 at 18:13:37 UTC from IEEE Xplore. Restrictions apply.

[32] A. V. Timbus, M. Liserre, R. Teodorescu, and F. Blaabjerg, "Synchronization methods for three phase distributed power generation systems. An overview and evaluation," in *Proc. IEEE PESC*, 2005, pp. 2474–2481.
[33] L. N. Arruda, S. M. Silva, and B. Filho, "PLL structures for utility connected systems," in *Proc. IEEE-IAS Annu. Meeting*, 2001, vol. 4, pp. 2655–2660.
[34] R. Teodorescu, F. Iov, and F. Blaabjerg, "Flexible development and test system for 11 kW wind turbine," in *Proc. IEEE PESC*, 2003, vol. 1, pp. 67–72.
[35] E. Twining and D. G. Holmes, "Grid current regulation of a three-phase voltage source inverter with an LCL input filter," *IEEE Trans. Power Electron.*, vol. 18, no. 3, pp. 888–895, May 2003.
[36] S. Fukuda and T. Yoda, "A novel current-tracking method for active filters based on a sinusoidal internal model," *IEEE Trans. Ind. Electron.*, vol. 37, no. 3, pp. 888–895, 2001.
[37] X. Yuan, W. Merk, H. Stemmler, and J. Allmeling, "Stationary-frame generalized integrators for current control of active power filters with zero steady-state error for current harmonics of concern under unbalanced and distorted operating conditions," *IEEE Trans. Ind. Appl.*, vol. 38, no. 2, pp. 523–532, Mar./Apr. 2002.
[38] R. Teodorescu and F. Blaabjerg, "Proportional-resonant controllers. A new breed of controllers suitable for grid-connected voltage-source converters," in *Proc. OPTIM*, 2004, vol. 3, pp. 9–14.
[39] D. Zmood and D. G. Holmes, "Stationary frame current regulation of PWM inverters with zero steady-state error," *IEEE Trans. Power Electron.*, vol. 18, no. 3, pp. 814–822, May 2003.
[40] M. Ciobotaru, R. Teodorescu, and F. Blaabjerg, "Control of single-stage single-phase PV inverter," in *Proc. PELINCEC*, 2005, CDROM.
[41] L. Malesani, P. Mattavelli, and P. Tomasin, "Improved constant-frequency hysteresis current control of VSI inverters with simple feedforward bandwidth prediction," *IEEE Trans. Ind. Appl.*, vol. 33, no. 5, pp. 1194–1202, Sep./Oct. 1997.
[42] L. Sonaglioni, "Predictive digital hysteresis current control," in *Proc. IEEE-IAS Annu. Meeting*, Orlando, FL, 1995, vol. 3, pp. 1879–1886.
[43] B. K. Bose, "An adaptive hysteresis-band current control technique of a voltage-fed PWM inverter for machine drive system," *IEEE Trans. Ind. Electron.*, vol. 37, no. 5, pp. 402–408, Oct. 1990.
[44] L. Malesani and P. Tenti, "A novel hysteresis control method for current-controlled voltage-source PWM inverters with constant modulation frequency," *IEEE Trans. Ind. Appl.*, vol. 26, no. 1, pp. 88–92, Jan./Feb. 1990.
[45] Q. Yao and D. Holmes, "A simple, novel method for variable-hysteresisband current control of a three phase inverter with constant switching frequency," in *Proc. IEEE-IAS Annu. Meeting*, Toronto, ON, Canada, 1993, pp. 1122–1129.
[46] P. Mattavelli, G. Spiazzi, and P. Tenti, "Predictive digital control of power factor preregulators with input voltage estimation using disturbance observers," *IEEE Trans. Power Electron.*, vol. 20, no. 1, pp. 140–147, Jan. 2005.
[47] Y. Ito and S. Kawauchi, "Microprocessor based robust digital control for UPS with three-phase PWM inverter," *IEEE Trans. Power Electron.*, vol. 10, no. 2, pp. 196–204, Mar. 1995.
[48] S.-K. Chung, "Phase-locked loop for grid-connected three-phase power conversion systems," *Proc. Inst. Electr. Eng.—Electron. Power Appl.*, vol. 147, no. 3, pp. 213–219, May 2000.
[49] V. Kaura and V. Blasko, "Operation of phase loop system under distorted utility conditions," *IEEE Trans. Ind. Appl.*, vol. 33, no. 1, pp. 58–63, 1997.
[50] *Characteristic of the Utility Interface for Photovoltaic (PV) Systems*, IEC1727, Nov. 2002.
[51] *IEEE Standard for Interconnecting Distributed Resources With Electric Power Systems*, IEEE15471, 2005.
[52] Eltra and Elkraft, *Wind Turbines Connected to Grids With Voltage Below 100 kV*, 2004. [Online]. Available: http://www.eltra.dk.
[53] E.ON-Netz, *Grid Code—High and Extra High Voltage*, 2003, Bayreuth, Germany: E.ON Netz GmbH. Tech. Rep. [Online]. Available: http://www.eon-netz.com/Ressources/downloads/enenarhseng1.pdf
[54] M. Newman, D. Zmood, and D. Holmes, "Stationary frame harmonic reference generation for active filter systems," *IEEE Trans. Ind. Appl.*, vol. 38, no. 6, pp. 1591–1599, Nov./Dec. 2002.
[55] M. H. J. Bollen, *Understanding Power Quality Problems: Voltage Sags and Interruptions*. Piscataway, NJ: IEEE Press, 2002.
[56] L. Moran, P. Ziogas, and G. Joos, "Design aspects of synchronous PWM rectifier–inverter systems under unbalanced input voltage conditions," *IEEE Trans. Ind. Appl.*, vol. 28, no. 6, pp. 1286–1293, Nov./Dec. 1992.
[57] M. Karimi-Ghartemani and M. Iravani, "A method for synchronization of power electronic converters in polluted and variable-frequency environments," *IEEE Trans. Power Syst.*, vol. 19, no. 3, pp. 1263–1270, Aug. 2004.
[58] P. Rodriguez, J. Pou, J. Bergas, I. Candela, R. Burgos, and D. Boroyevich, "Double synchronous reference frame PLL for power converters," in *Proc. IEEE PESC*, 2005, pp. 1415–1421.
[59] M. C. Benhabib and S. Saadate, "A new robust experimentally validated phase-looked loop for power electronic control," *EPE J.*, vol. 15, no. 3, pp. 36–48, Aug. 2005.
[60] A. V. Timbus, M. Liserre, F. Blaabjerg, R. Teodorescu, and P. Rodriguez, "PLL algorithm for power generation systems robust to grid faults," in *Proc. IEEE PESC*, 2006, pp. 1360–1366.
[61] H.-S. Song and K. Nam, "Dual current control scheme for PWM converter under unbalanced input voltage conditions," *IEEE Trans. Ind. Electron.*, vol. 46, no. 5, pp. 953–959, Oct. 1999.
[62] A. Stankovic and T. Lipo, "A novel control method for input output harmonic elimination of the PWM boost type rectifier under unbalanced operating conditions," *IEEE Trans. Power Electron.*, vol. 16, no. 5, pp. 603–611, Sep. 2001.
[63] A. V. Timbus, P. Rodriguez, R. Teodorescu, M. Liserre, and F. Blaabjerg, "Control strategies for distributed power generation systems operating on faulty grid," in *Proc. IEEE ISIE*, 2006, pp. 1601–1607.
[64] P. Verdelho, "Voltage type reversible rectifiers control methods in unbalanced and nonsinusoidal conditions," in *Proc. IEEE IECON*, 1998, vol. 1, pp. 479–484.
[65] S. Lee, J. Kang, and S. Sul, "A new phase detection method for power conversion systems considering distorted conditions in power system," in *Proc. IEEE-IAS Annu. Meeting*, 1999, vol. 4, pp. 2167–2172.
[66] H. Song, H. Park, and K. Nam, "An instantaneous phase angle detection algorithm under unbalanced line voltage condition," in *Proc. IEEE PESC*, 1999, vol. 1, pp. 533–537.
[67] M. Ciobotaru, R. Teodorescu, and F. Blaabjerg, "Improved PLL structures for single-phase grid inverters," in *Proc. EPE*, 2005, CD-ROM.

Frede Blaabjerg (S'86–M'88–SM'97–F'03) received the M.Sc.EE. degree from Aalborg University, Aalborg, Denmark, in 1987, and the Ph.D. degree from the Institute of Energy Technology, Aalborg University, in 1995.

He was with ABB-Scandia, Randers, Denmark, from 1987 to 1988. He was an Assistant Professor with Aalborg University in 1992, an Associate Professor in 1996, and a Full Professor in power electronics and drives in 1998. In 2006, he became the Dean of the Faculty of Engineering and Science, Aalborg University. He is the author or coauthor of more than 300 publications in his research fields, including the book *Control in Power Electronics* (Academic, 2002). His research areas are in power electronics, static power converters, ac drives, switched reluctance drives, modeling, characterization of power semiconductor devices and simulation, wind turbines, and green power inverters. During recent years, he has held a number of chairmanship positions in research policy and research funding bodies in Denmark.

Prof. Blaabjerg is an Associate Editor of the IEEE TRANSACTIONS ON INDUSTRY APPLICATIONS, the IEEE TRANSACTIONS ON POWER ELECTRONICS, the *Journal of Power Electronics*, and the Danish journal *Elteknik*. In 2006, he became the Editor-in-Chief of the IEEE TRANSACTIONS ON POWER ELECTRONICS. He received the 1995 Angelos Award for his contribution in modulation technique and control of electric drives and the Annual Teacher Prize at Aalborg University also in 1995. In 1998, he received the Outstanding Young Power Electronics Engineer Award from the IEEE Power Electronics Society. He also received the C.Y. O'Connor Fellowship from Perth, Australia (2002), the Statoil Prize for his contributions to power electronics (2003), and the Grundfos Prize for his contributions to power electronics and drives (2004). He has received five IEEE Prize Paper Awards during the last six years.

Authorized licensed use limited to: Pontificia Universidad Catolica de Chile. Downloaded on March 17,2026 at 18:13:37 UTC from IEEE Xplore. Restrictions apply.

Remus Teodorescu (S'94–A'97–M'99–SM'02) received the Dipl.Ing. degree in electrical engineering from the Polytechnic University of Bucharest, Bucharest, Romania, in 1989, and the Ph.D. degree in power electronics from the University of Galati, Galati, Romania, in 1994.

From 1989 to 1990, he was with the Iron and Steel Plant Galati, and then he moved to Galati University where he was an Assistant Professor with the Electrical Engineering Department. In 1998, he joined the Power Electronics Section, Institute of Energy Technology, Aalborg University, Aalborg, Denmark, where he is currently an Associate Professor. His research areas include power converters for renewable energy systems (PV, wind turbines) and electrical drives. He has coauthored more than 100 technical papers, 12 of them published in journals. He is the coauthor of two books and five patents.

Dr. Teodorescu is an Associate Editor for the IEEE POWER ELECTRONICS LETTERS and Chair of the IEEE Danish IAS/IES/PELS chapter. He received the Technical Committee Prize Paper Award at IEEE-IAS'98 and the OPTIM-ABB Prize Paper Award at OPTIM 2002.

Marco Liserre (S'00–M'03) received the M.Sc. and Ph.D. degrees in electrical engineering from the Politecnico di Bari, Bari, Italy, in 1998 and 2002, respectively.

He is currently an Assistant Professor at the Politecnico di Bari. He has coauthored some 80 technical papers, 16 of which were published or are to be published in peer-reviewed international journals, and three chapters of the book edited by F. Lattarulo, *Electromagnetic Compatibility in Power Systems*, which will be published by Elsevier at the end of 2006. His research interests include power converters and drives including the control of converters, power quality, and distributed generation.

Dr. Liserre is a member of the IEEE Industry Applications, IEEE Industrial Electronics, and IEEE Power Electronics Societies. In the IEEE Industrial Electronics Society, he was an AdCom Member during 2003–2004 and the Chair for Student Activities during 2002–2004, and has been the Chair for Region 8 Membership Activities since 2004 and the Newsletter Editor since 2005. He is also an Associate Editor of the IEEE TRANSACTIONS ON INDUSTRIAL ELECTRONICS. He will be the Editor-in-Chief of the new *IEEE Industrial Electronics Magazine*.

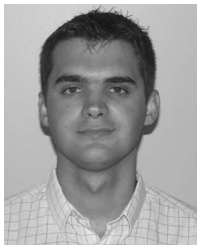

Adrian V. Timbus (S'04) received the Engineering Diploma and the Master's degree from the Technical University of Cluj-Napoca, Cluj-Napoca, Romania, in 2000 and 2001, respectively, and the M.Sc.EE. degree from Aalborg University, Aalborg, Denmark, in 2003. He is currently working toward the Ph.D. degree at the Institute of Energy Technology, Aalborg University.

His research is focused on the control of power converters, especially when employed for renewable energy systems. His major interests are advanced control to overcome grid faults as well as grid synchronization and grid monitoring.

Mr. Timbus is a member of the IEEE Power Electronics Societies, IEEE Industrial Electronics, and IEEE Power Engineering Societies.

Authorized licensed use limited to: Pontificia Universidad Catolica de Chile. Downloaded on March 17,2026 at 18:13:37 UTC from IEEE Xplore. Restrictions apply.